FLOFAB SINCE 1981

PUMP SOLUTIONS MANUFACTURER

				0.5~6	6~30	30~120	120~400	400~1000	1000-2000
				±0.1	±0.2	±0.3	±0.5	±0.8	±1.2

W/P	Class125
Working Temp.	EPDM -20℃~+120℃
Medium	W. O. G
Shell test	2.5MPa
Flange to	ANSI B16.1

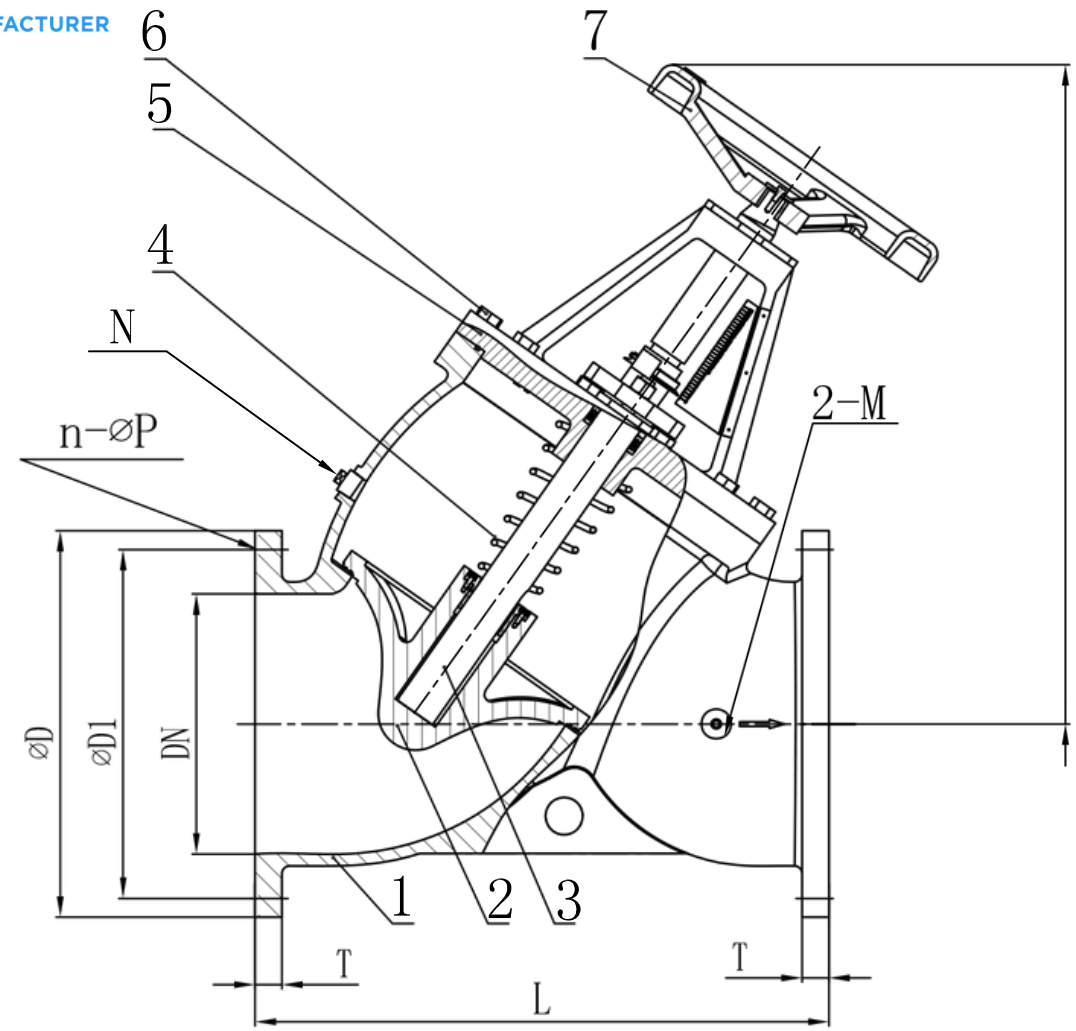

Technical:
1,KV of pressure against temperateure conform to ASME B16.34。
2,TEST CONFORM TO API 598。

No.	Name	Q'TY	Material
7	Handwheel	1	Cast iron
6	Stud	N	carbon steel
5	Cover	1	CI
4	Spring	1	SS304
3	Shaft	1	SS410
2	Disc	1	DI+EPDM
1	Body	1	CI

NPS	DN	L	ØD	ØD1	T	n-ØP	M	N	H1	H2
14	350	772	⌀533.4	⌀476.3	35	12-Ø28.5	3/4″ NPT	1″ NPT	863	986
16	400	858	⌀596.9	⌀539.8	36.6	16-Ø28.5			958	1085
18	450	938	⌀635	⌀577.9	39.6	16-Ø31.8			1103	1268
20	500	1050	Ø698.5	Ø635	42.9	16-Ø31.8			1193	1384

FV30-38 Class125

FV30-38

1

2014-7-24