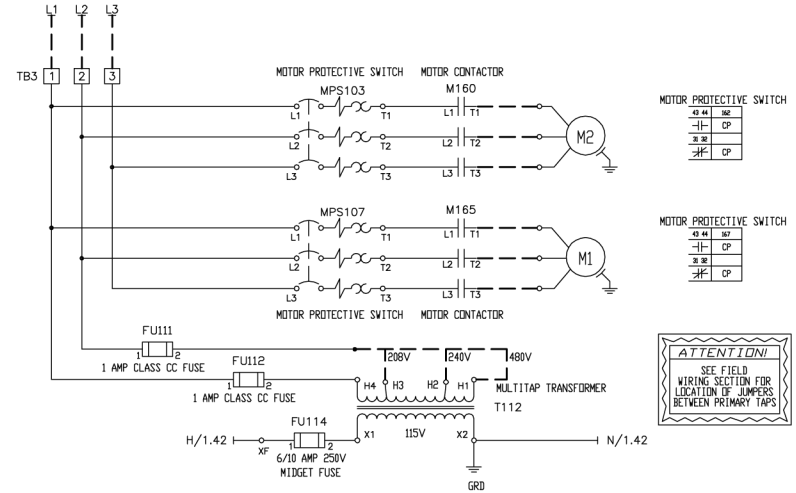

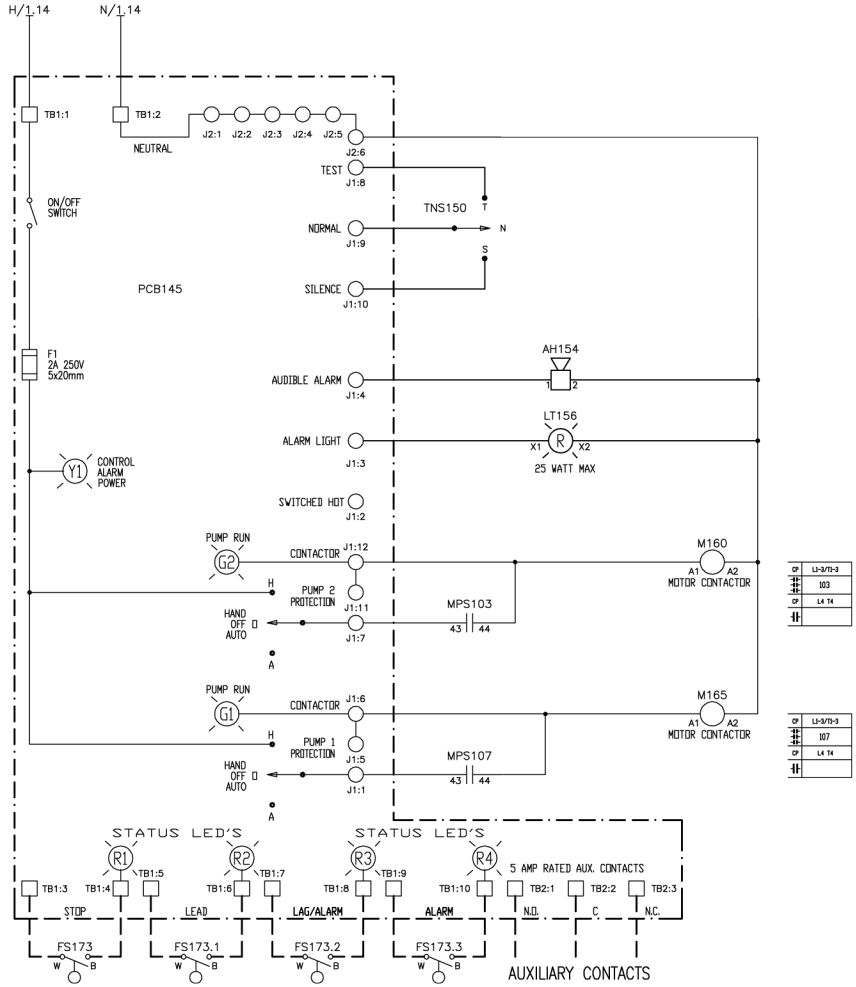

ACTUAL MODEL NUMBER ORDERED

3221W(00-61)1(H,X)6A*

REV	CHNGD BY	ECO NO.	DATE	DRWN	APPD
C	012422	C002494	4/05	GDV	RMS
B		C002360	1/05	GDV	RMS
A		C001843	9/03	GDV	
REV		ECO NO.	DATE	DRWN	APPD

NOTICE: THIS DRAWING CONTAINS PROPRIETARY INFORMATION AND IT SHALL NOT BE USED OR REPRODUCED OR ITS CONTENTS DISCLOSED IN WHOLE OR IN PART, WITHOUT PRIOR WRITTEN CONSENT.

DRWN BY	DATE	CHKD BY	DATE	APPD BY	DATE
GDV	9/11/03	RMS	9/15/03	RMS	9/15/03

DEM NAME: N/A
DEM P/N: N/A
PAGE: 1 of 1
SCALE: NONE
DWG SIZE: D

PROJECT NO. 1012422
QUOTE NO. N/A
REV. C
TITLE: LIT, RH, SCHEM (SEE ABOVE)