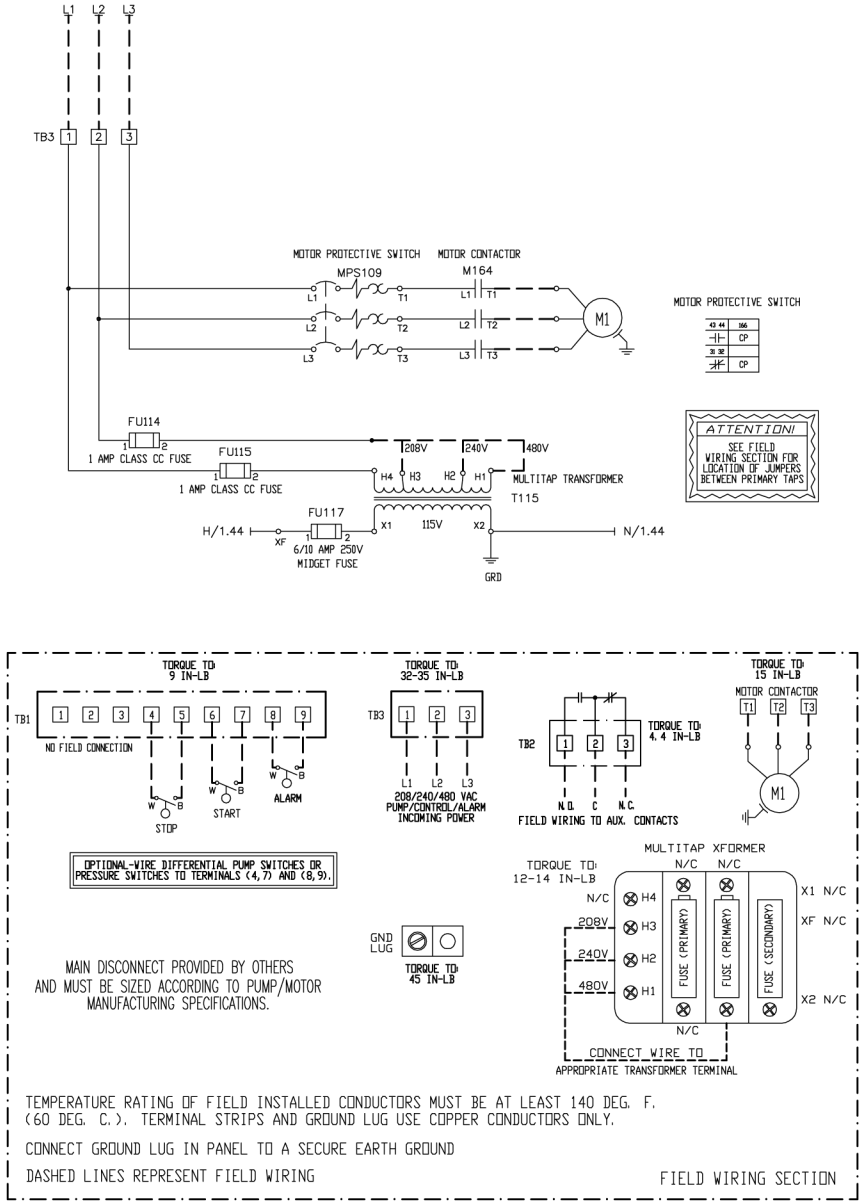

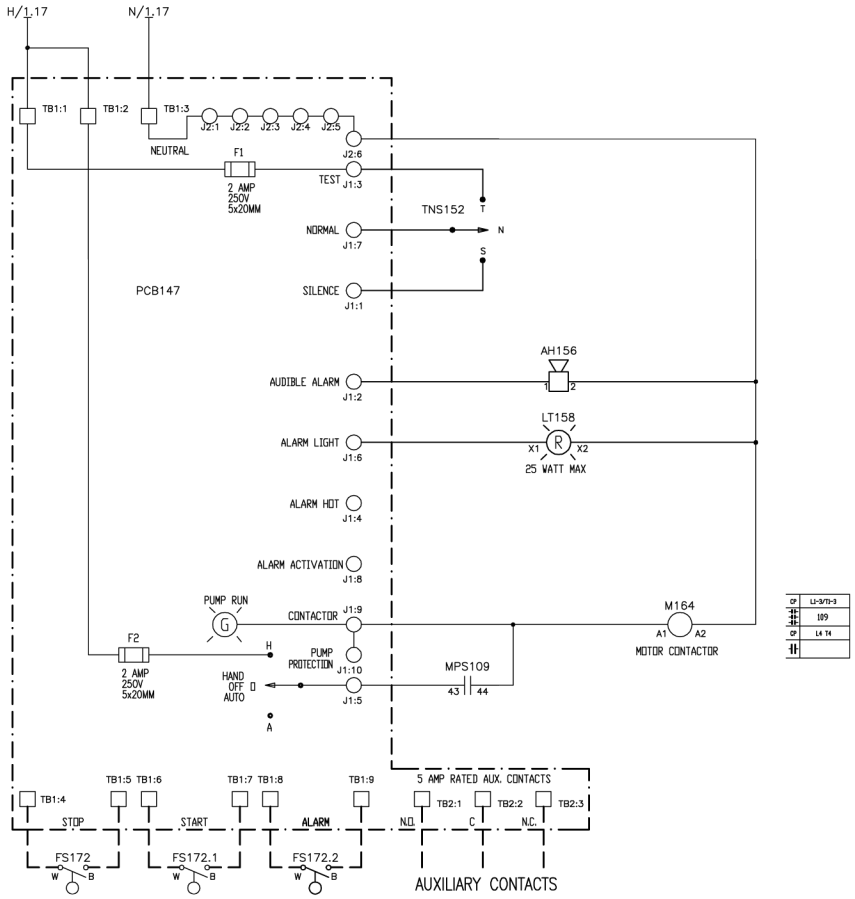

ACTUAL MODEL NUMBER ORDERED

3121W(00-61)1(H,X)6A*

REV	ECO NO.	DATE	DRAWN	APPD
B	C002360	1/05	GDV	RMS
A	C001843	09/03	GDV	

NOTICE: THIS DRAWING CONTAINS PROPIETARY INFORMATION AND IT SHALL NOT BE USED OR REPRODUCED OR ITS CONTENTS DISCLOSED IN WHOLE OR IN PART, WITHOUT PRIOR WRITTEN CONSENT.

DRWN BY	DATE	CHKD BY	DATE	APPD BY	DATE
GDV	09/11/03	RMS	9/15/03	RMS	9/15/03

DEM NAME	DEM P/N	PAGE	SCALE	DWG SIZE
N/A	N/A	1 of 1	NONE	D

PROJECT NO.	QUOTE NO.	REV.
1012421	N/A	B

TITLE: LIT, RH, SCHEM (SEE ABOVE)

CONTROL NO. 1012421