SETUP INSTRUCTIONS FOR TIMED DOSE OR DEMAND DOSE

1. DISCONNECT POWER TO THE PANEL.
2. LOCATE DIP SWITCH WINDOW ON INNER DOOR LABEL. PLACE DIP SWITCH IN DESIRED POSITON AS SHOWN.
3. SEE FIELD WIRING SECTION FOR FLOAT HOOKUP AND CHECK BOX FOR SETUP USED.
4. RECONNECT POWER TO THE PANEL.
5. AFTER PANEL HAS INTIALIZED PRESS THE 'NEXT' BUTTON ONCE ON INNER DOOR TO CONFIRM T-DOSE (TIMED DOSE) OR D-DOSE (DEMAND DOSE).

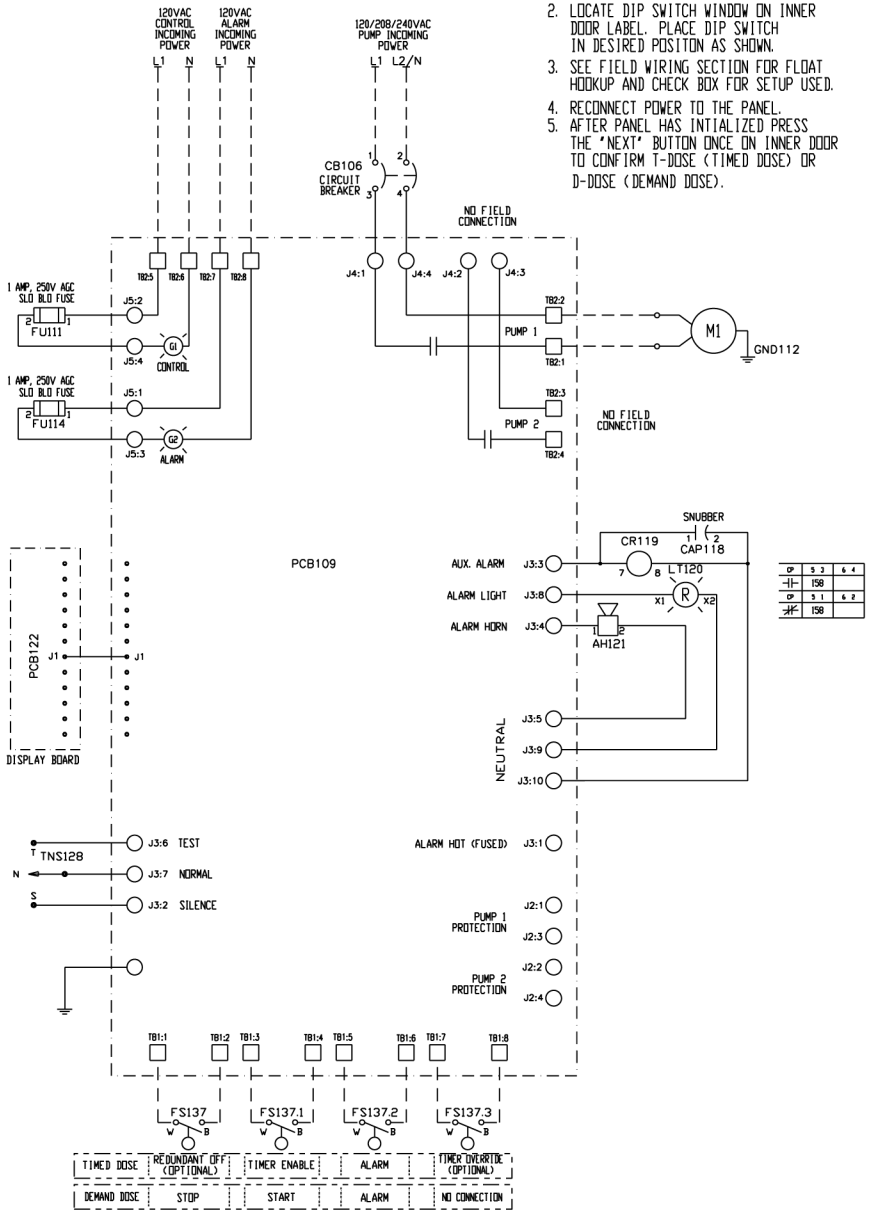

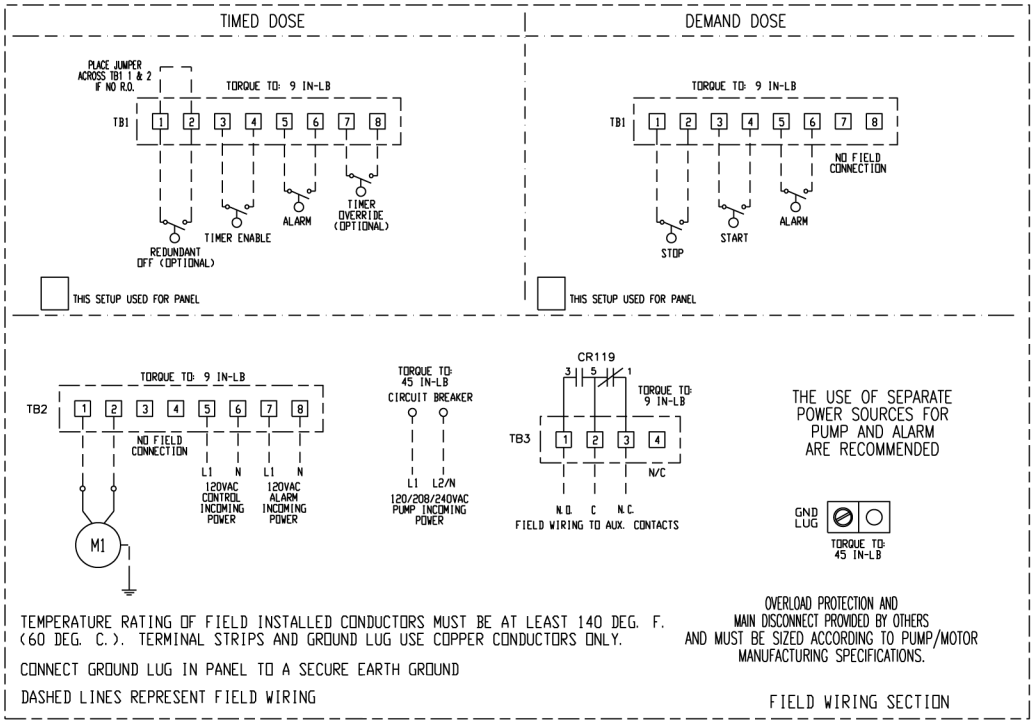

PUMP SPECIFICATIONS
BRAND: _____
MODEL: _____
SERIAL #: _____
VAC: ___ FLA: ___ HP: __
DRAWDOWN: _____
SQUIRT: _____

FLOAT HEIGHT (TD)
R. O. : _____FT
T. E: _____FT
ALARM: _____FT
T. O. : _____FT
TIMED DOSE

FLOAT HEIGHT (DEMAND)
STOP: _____FT
START: _____FT
ALARM: _____FT
DEMAND DOSE

TIMER SETTINGS
ON TIME: _____
OFF TIME: _____
TIMED DOSE

INSTALLATION
INST. BY: _____ DATE: _____
TELEPHONE: _____
INSTALLER PLEASE CHECK SETUP USED IN FIELD WIRING SECTION

NOTICE: THIS DRAWING CONTAINS PROPRIETARY INFORMATION AND IT SHALL NOT BE USED OR REPRODUCED OR ITS CONTENTS DISCLOSED IN WHOLE OR IN PART, WITHOUT PRIOR WRITTEN CONSENT.

REV. CHGS. TOP: 1121BBCE

REV	ECO NO.	DATE	DRWN	APPD
B	4227	01/10	GDV	KLC
A	3879	01/08	GDV	

DRWN BY	DATE	CHKD BY	DATE	APPD BY	DATE
GDV	03/04/08	GDV	03/04/08	RMS	03/05/08

DEM NAME: N/A
DEM P/N: N/A
PAGE: 1 of 1
SCALE: NONE
DWG SIZE: D

PROJECT NO.: 1022408
QUOTE NO.: N/A
REV.: B

TITLE: LIT, RH, SCH IFS21W114X6A8AC10E