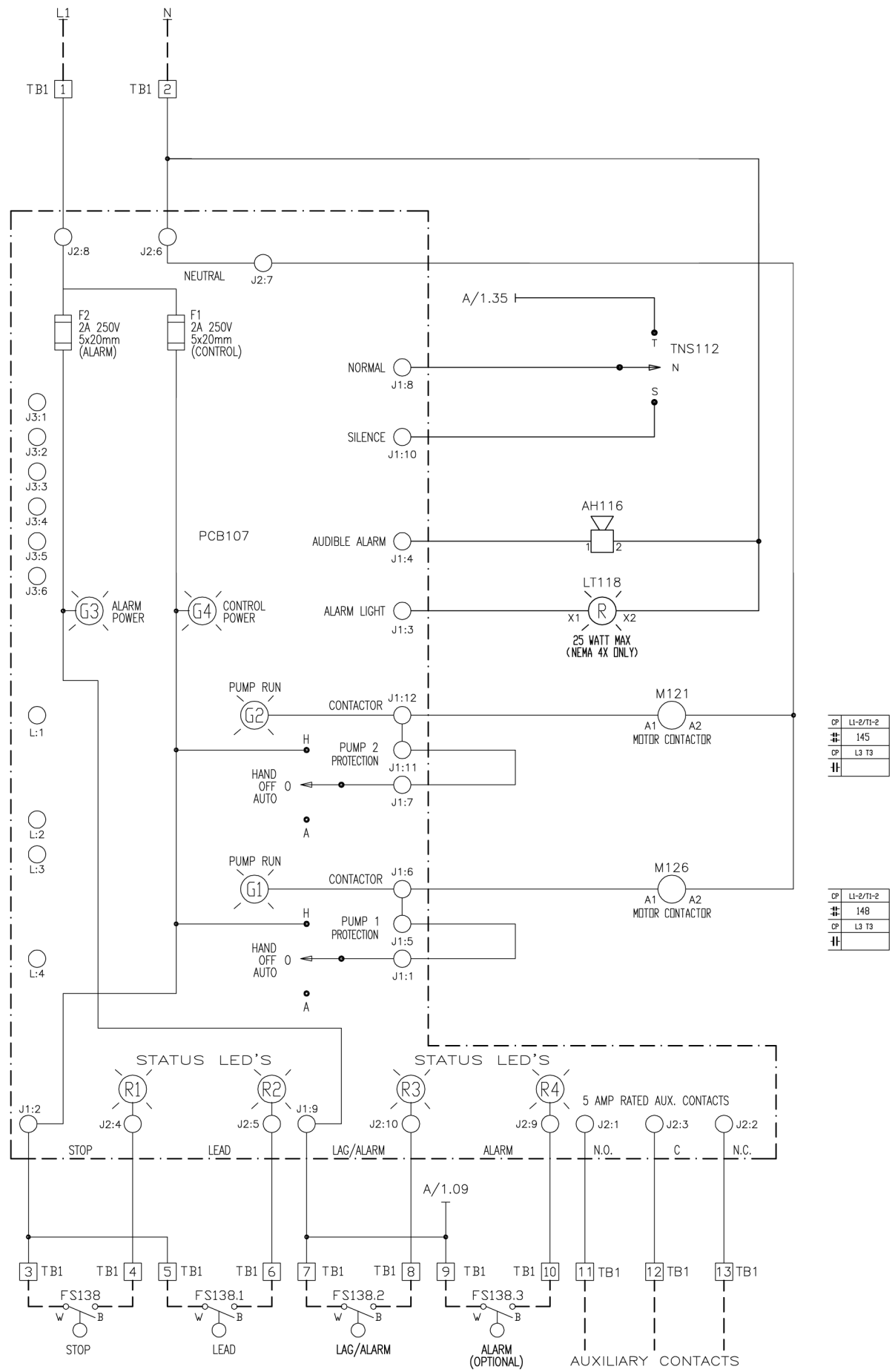

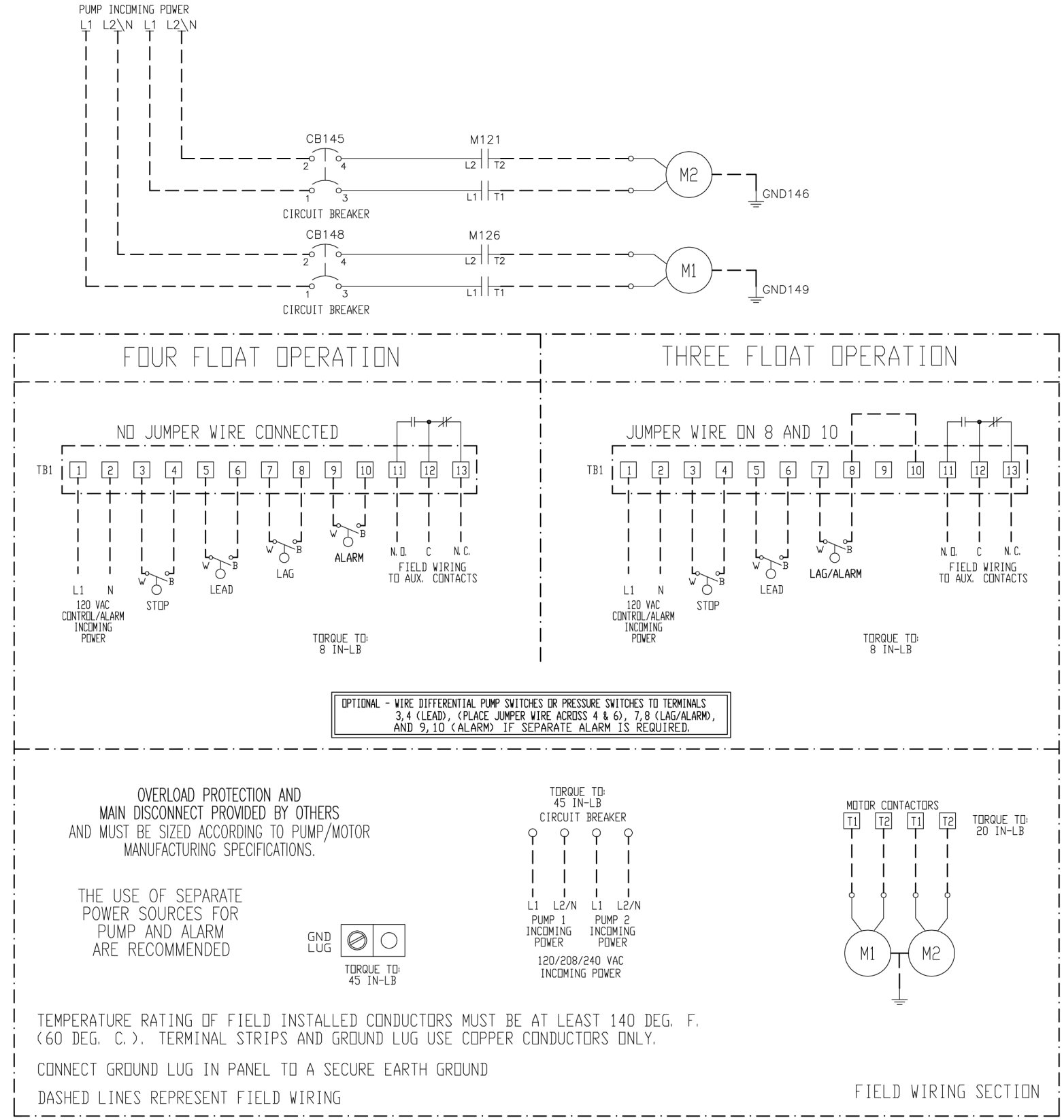

ACTUAL MODEL NUMBER ORDERED

WAS: 1221*1(0,1,2,3)4(H,X)6A*

REV	ECO NO.	DATE	DRWN	APPD
A	C002613	11/05	GDV	

REV. CNTRL FOR: 1018001

NOTICE: THIS DRAWING CONTAINS PROPIETARY INFORMATION AND IT SHALL NOT BE USED OR REPRODUCED OR ITS CONTENTS DISCLOSED IN WHOLE OR IN PART, WITHOUT PRIOR WRITTEN CONSENT.

DRWN BY	DATE	CHKD BY	DATE	APPD BY	DATE	PROJECT NO.	QUOTE NO.	REV.
GDV	11/2/05	GDV	11/2/05	KLC	11/3/05	1018001	N/A	A

OEM NAME	OEM P/N	PAGE	SCALE	DWG SIZE	TITLE
N/A	N/A	1 of 1	NONE	D	LIT, RH, SCHEM (SEE ABOVE)