CONTROL PANEL	
ITEM 9	POSITION
☐	0°
☐	90°
☐	180°
☐	270°
☐	WALL MOUNTED

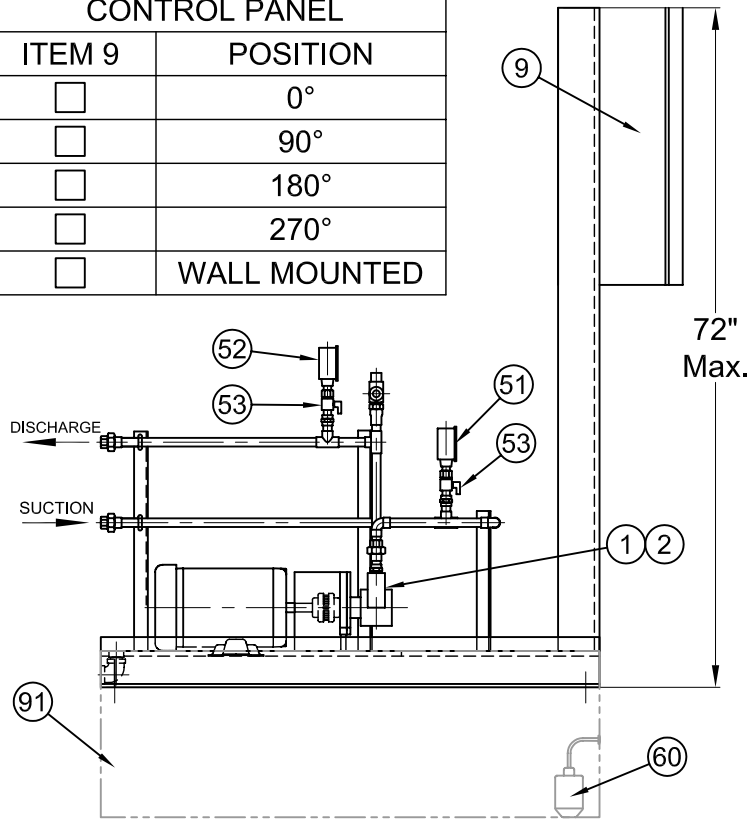

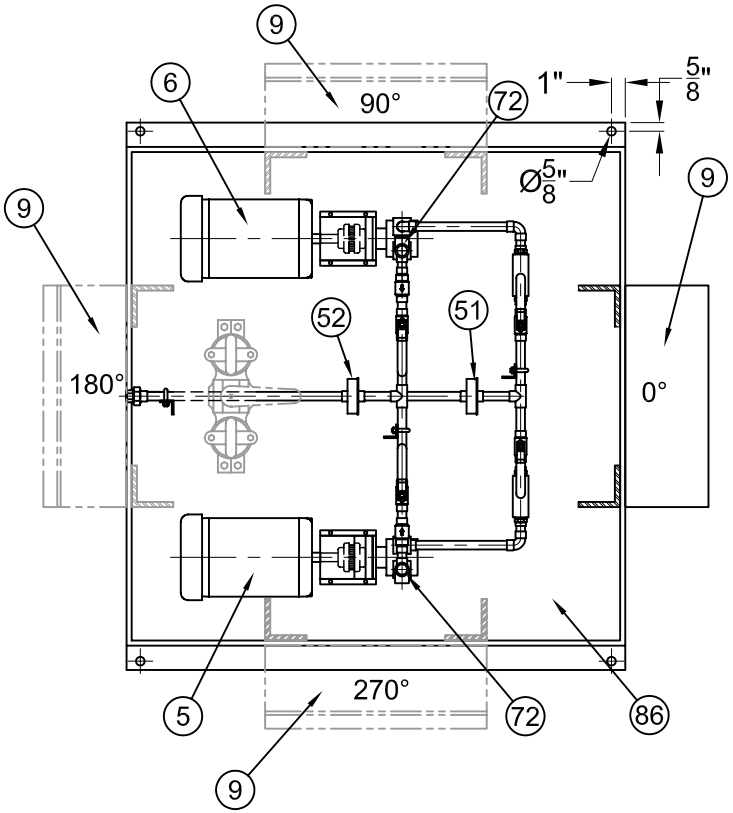

STANDARD	☐	DY-FOM-CYS16-170
	☐	DY-FOM-CYS16-295
	☐	DY-FOM-CYS16-377
	☐	DY-FOM-CYS16-560
	☐	DY-FOM-CYS16-1026
OPTIONS	☐	DP-FOM-CYS16-170
	☐	DP-FOM-CYS16-295
	☐	DP-FOM-CYS16-377
	☐	DP-FOM-CYS16-560
	☐	DP-FOM-CYS16-1026
OPTIONS	☐	DY-FOM-R-CYS16-170
	☐	DY-FOM-R-CYS16-295
	☐	DY-FOM-R-CYS16-377
	☐	DY-FOM-R-CYS16-560
	☐	DY-FOM-R-CYS16-1026
OPTIONS	☐	DP-FOM-R-CYS16-170
	☐	DP-FOM-R-CYS16-295
	☐	DP-FOM-R-CYS16-377
	☐	DP-FOM-R-CYS16-560
	☐	DP-FOM-R-CYS16-1026

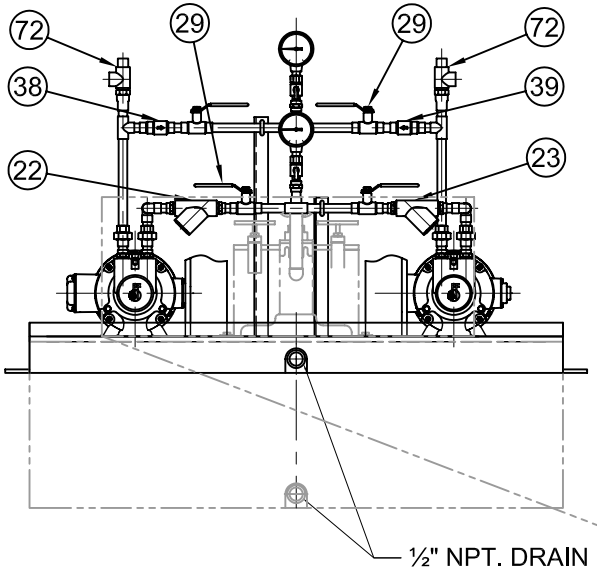

STANDARD	☐	Y STRAINER 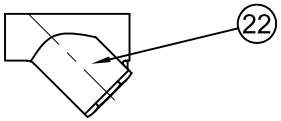
OPTION	☐	DUPLEX BASKET STRAINER 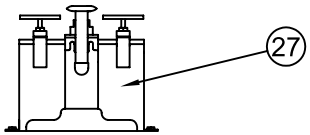

TITLE / TITRE

FLO FAB FUEL OIL TRANSFER SYSTEM
SERIES "FOM"

FLO FAB
AQUA PROFAB
860 BOULEVARD INDUSTRIEL
BOIS-DES-FILION, QC
J6Z 4V7, (450) 621-2995

ENGINEER / INGÉNIEUR			
CUSTOMER / CLIENT			
PART LIST N° / LISTE DE MATERIEL N°		DATE / DATE	APRIL 2007
DRAWN BY / DESSINATEUR	SCALE / ÉCHELLE	DRAWING N° / N° DESSIN	REV
M. LYMBURNER	N / A	D-FOM-SUBMITTAL	0

NO	QTY	DESCRIPTION	SIZE	PART NUMBER
1	1	PUMP 1		
2	1	PUMP 2		
5	1	M1 MOTOR		
6	1	M2 MOTOR		
9	1	PANEL CONTROL		
22	1	NO. 1 Y-STRAINER		
23	1	NO. 2 Y-STRAINER		
27		DUPLEX BASKET STRAINER		
29	4	BALL VALVE C X C		
38	1	NO. 1 DISCHARGE CHECK VALVE		
39	1	NO. 2 DISCHARGE CHECK VALVE		
51	1	SUCTION PRESSURE GAUGE		
52	1	DISCHARGE PRESSURE GAUGE		
53	2	PET COCKS		
60	1	LEVEL FLOAT		
72	2	PRESSURE RELIEF VALVE		
86	1	STEEL FABRICATED BASEPLATE		
91		RESERVOIR TANK		

REV	DESCRIPTION	DATE	INIT.

TITLE / TITRE

FLO FAB - DUPLEX "FOM"

MATERIAL LIST

FLO FAB
AQUA PROFAB

860 BOULEVARD INDUSTRIEL
BOIS-DES-FILION, QC
J6Z 4V7, (450) 621-2995

PROJECT / PROJET

CUSTOMER / CLIENT

DRAWING N° / N° DESSIN

DATE / DATE: MAY 2007

DRAWN BY / DESSINATEUR: M. LYMBURNER

SCALE / ÉCHELLE: N / A

PART LIST N° / LISTE DE MATERIEL N°

REV: 0