MODEL # RWUV-42-081

Design Notes

Code..... ASME Sec IV HLW

Design Pressure..... 125 psi

Test Pressure.....125 psi

Interior.....Glass Lining

Exterior..... Baked Enamel Steel Jacket

Insulation..... 2” R-12.5 Open Cell Foam

Supports..... 2” Rails

Capacity.....435 Gal./ 486 nominal

Weight.....1024 Lbs.

Material Specifications

Heads..... Carbon Steel

Shell..... Carbon Steel

Couplings..... Carbon Steel

Flanges..... N/A

Pipe..... N/A

Manway..... Carbon Steel

Jacket..... 24 Gauge Steel

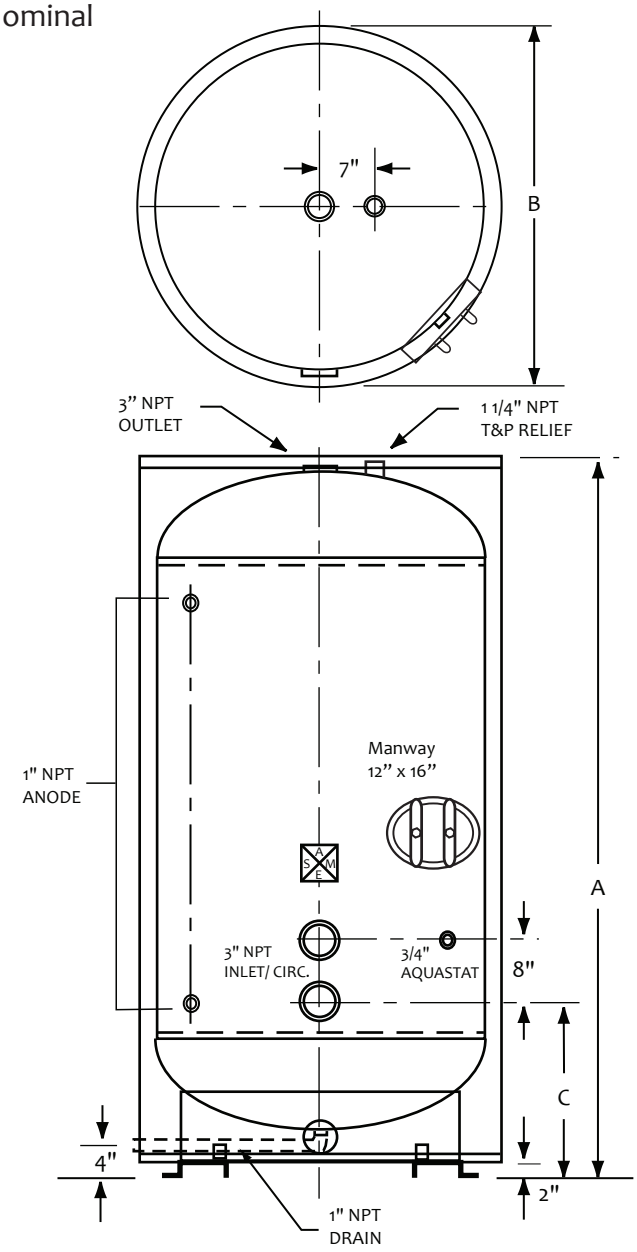

Mark	Dimension	Remark
A	89"	Overall height
B	46"	Diameter
C	22.5"	Circulation

NOTES	
PROJECT	
CUSTOMER	
SCALE	Not to Scale
DATE	
CUSTOMER P.O. #	
DRAWING Rev NO.	