# MODEL # RWUV-30-111

## Design Notes

Code..... ASME Sec IV HLW
Design Pressure..... 125 psi
Test Pressure.....125 psi
Interior.....Glass Lining
Exterior..... Baked Enamel Steel Jacket
Insulation..... 2” R-12.5 Open Cell Foam
Supports..... 2” Rails
Capacity.....320 Gal./ 390 nominal
Weight.....730 Lbs.

## Material Specifications

Heads..... Carbon Steel
Shell..... Carbon Steel
Couplings..... Carbon Steel
Flanges..... N/A
Pipe..... N/A
Manway..... N/A
Jacket..... 24 Gauge Steel

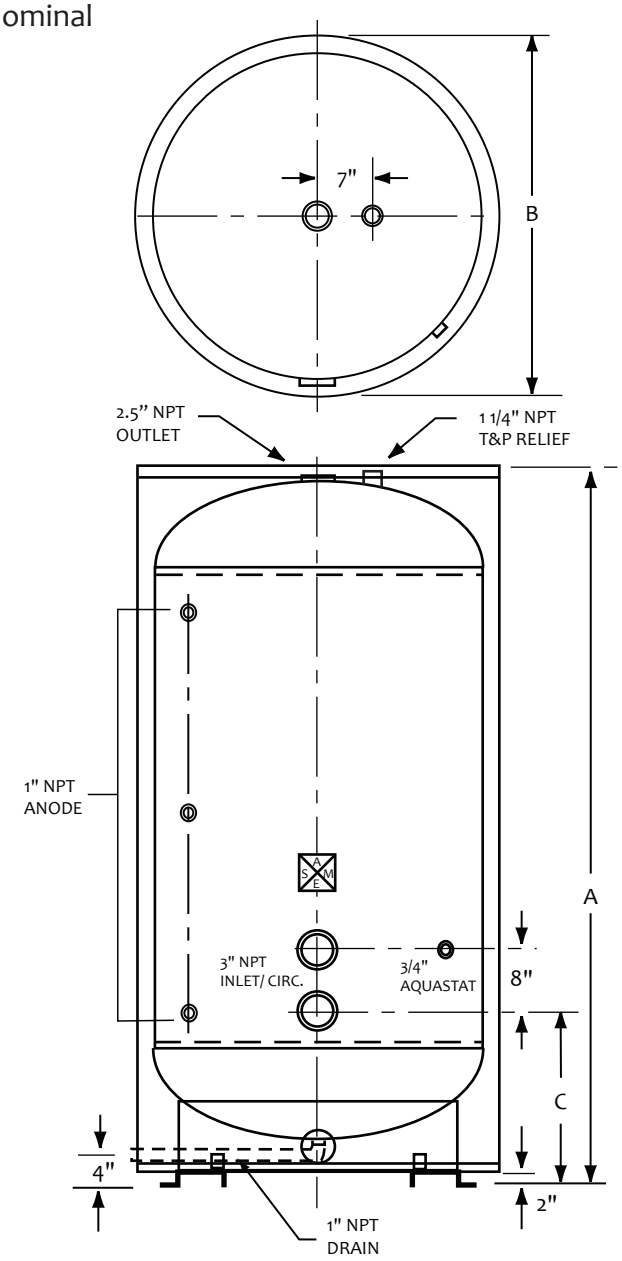


| Mark | Dimension | Remark |
|---|---|---|
| A | 119" | Overall height |
| B | 34" | Diameter |
| C | 19.5" | Circulation |
| | | |
| | | |
| | | |
| | | |
| | | |
| | | |
| | | |
| | | |
| | | |

| NOTES | |
|---|---|
| PROJECT | |
| CUSTOMER | |
| SCALE | Not to Scale |
| DATE | |
| CUSTOMER P.O. # | |
| DRAWING Rev NO. | |